combi frame:x™

Exploded views / Part lists

Rev. date (01.2021)

On the following pages you will find the parts used to assemble this product. Please note that some spare parts cannot be purchased individually but are part of a complete kit. Please also note that for some spare parts extra delivery time may occur.

R82 A/S
Parallelvej 3
8751 Gedved
Denmark

Tel: +45 79 68 58 88
Fax: +45 75 66 51 92
E-mail: R82@R82.dk
Web: www.R82.org

Cvr. Nr.: 16 20 21 85
Swift: JYBA DKKK
Iban No.:DK8072450002003501

Contents

Combi Frame:x.....3–9
Seat and Back..... 10–12
Frame..... 13–16
Accessories 17–20

R82 A/S
Parallelvej 3
8751 Gedved
Denmark

Tel: +45 79 68 58 88
Fax: +45 75 66 51 92
E-mail: R82@R82.dk
Web: www.R82.org

Cvr. Nr.: 16 20 21 85
Swift: JYBA DKKK
Iban No.:DK8072450002003501

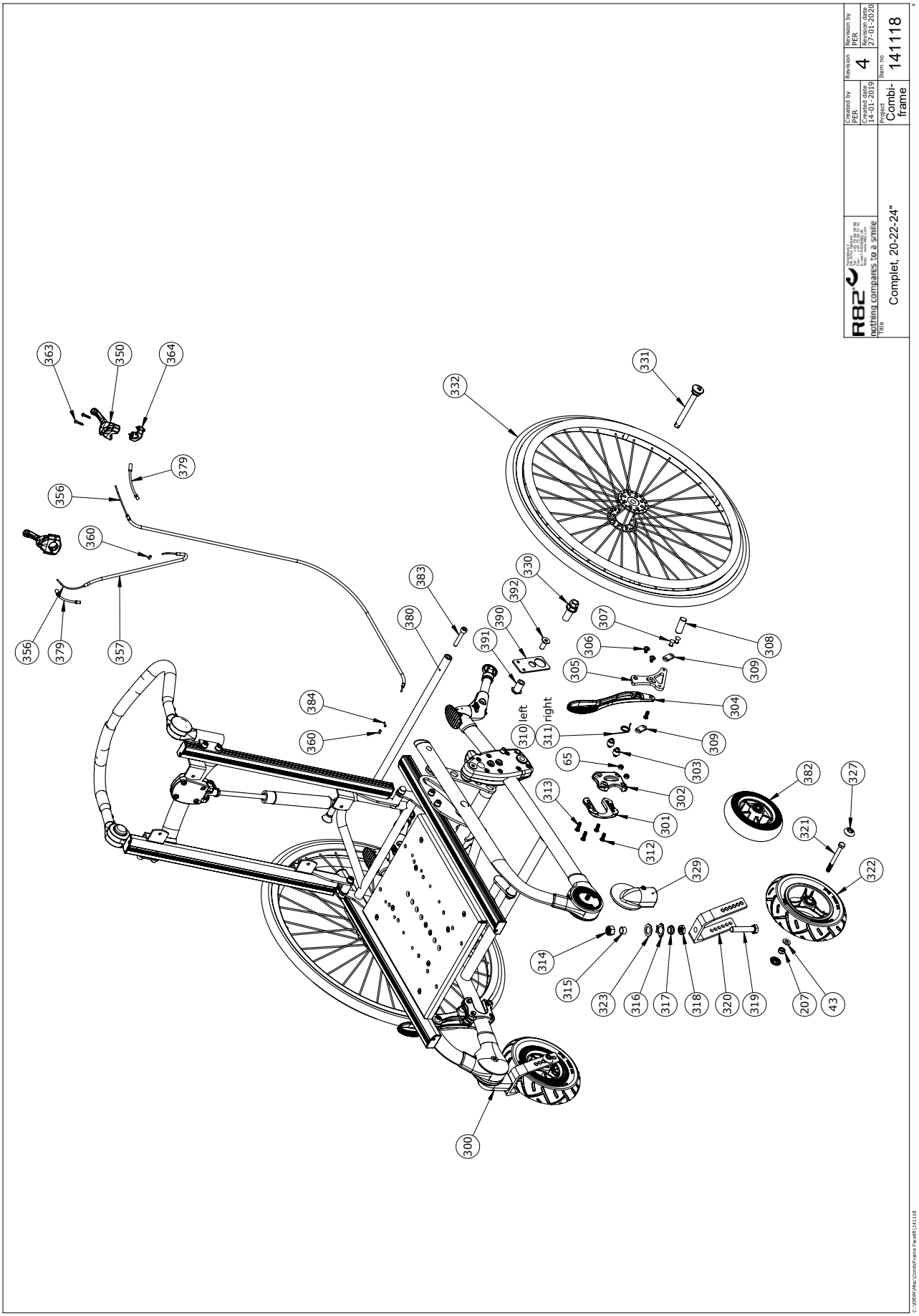

R82 A/S
Parallelvej 3
8751 Gedved
Denmark

Tel: +45 79 68 58 88
Fax: +45 75 66 51 92
E-mail: R82@R82.dk
Web: www.R82.org

Cvr. Nr.: 16 20 21 85
Swift: JYBA DKKK
Iban No.:DK8072450002003501

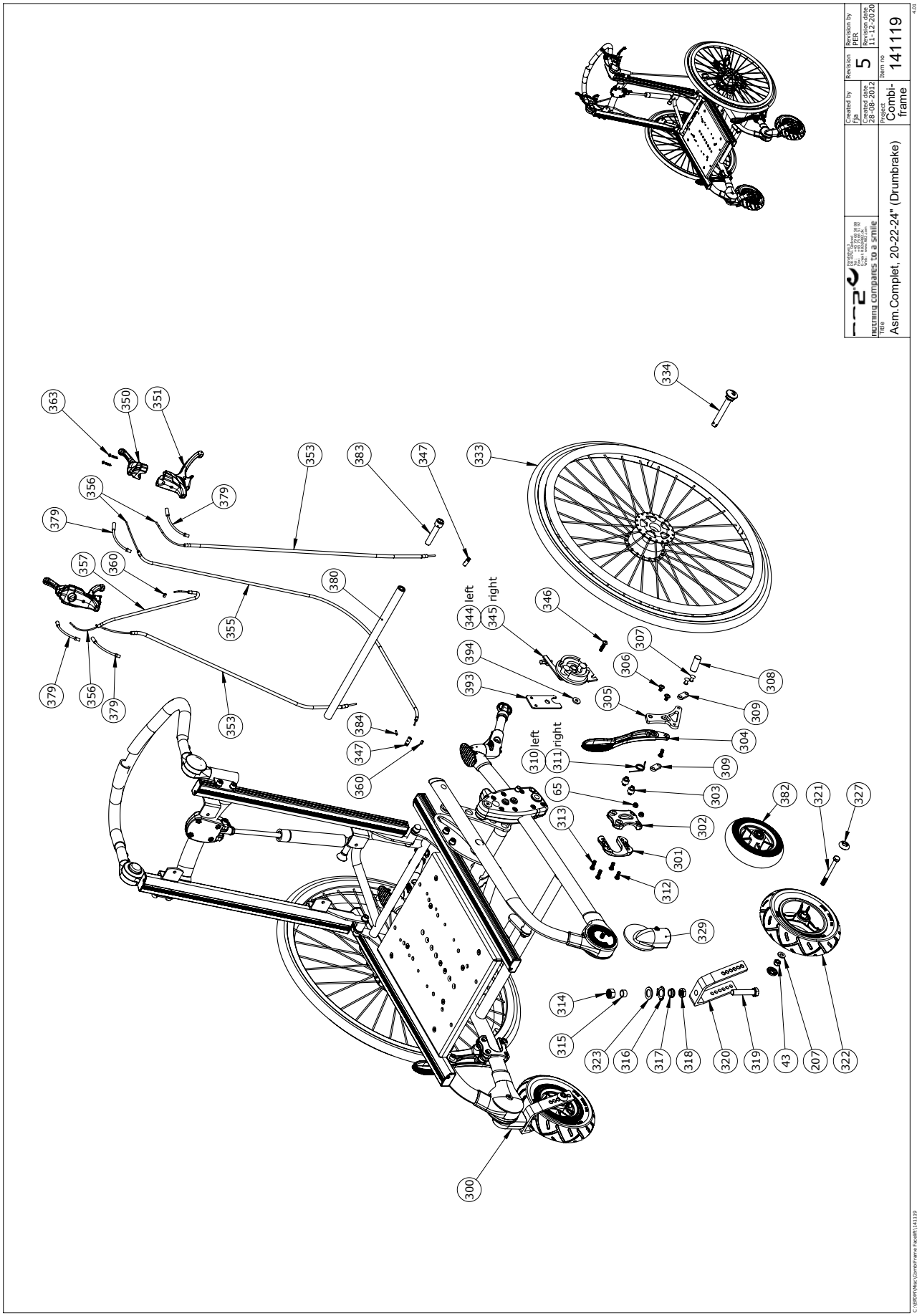

R82 A/S
Parallelvej 3
8751 Gedved
Denmark

Tel: +45 79 68 58 88
Fax: +45 75 66 51 92
E-mail: R82@R82.dk
Web: www.R82.org

Cvr. Nr.: 16 20 21 85
Swift: JYBA DKKK
Iban No.:DK8072450002003501

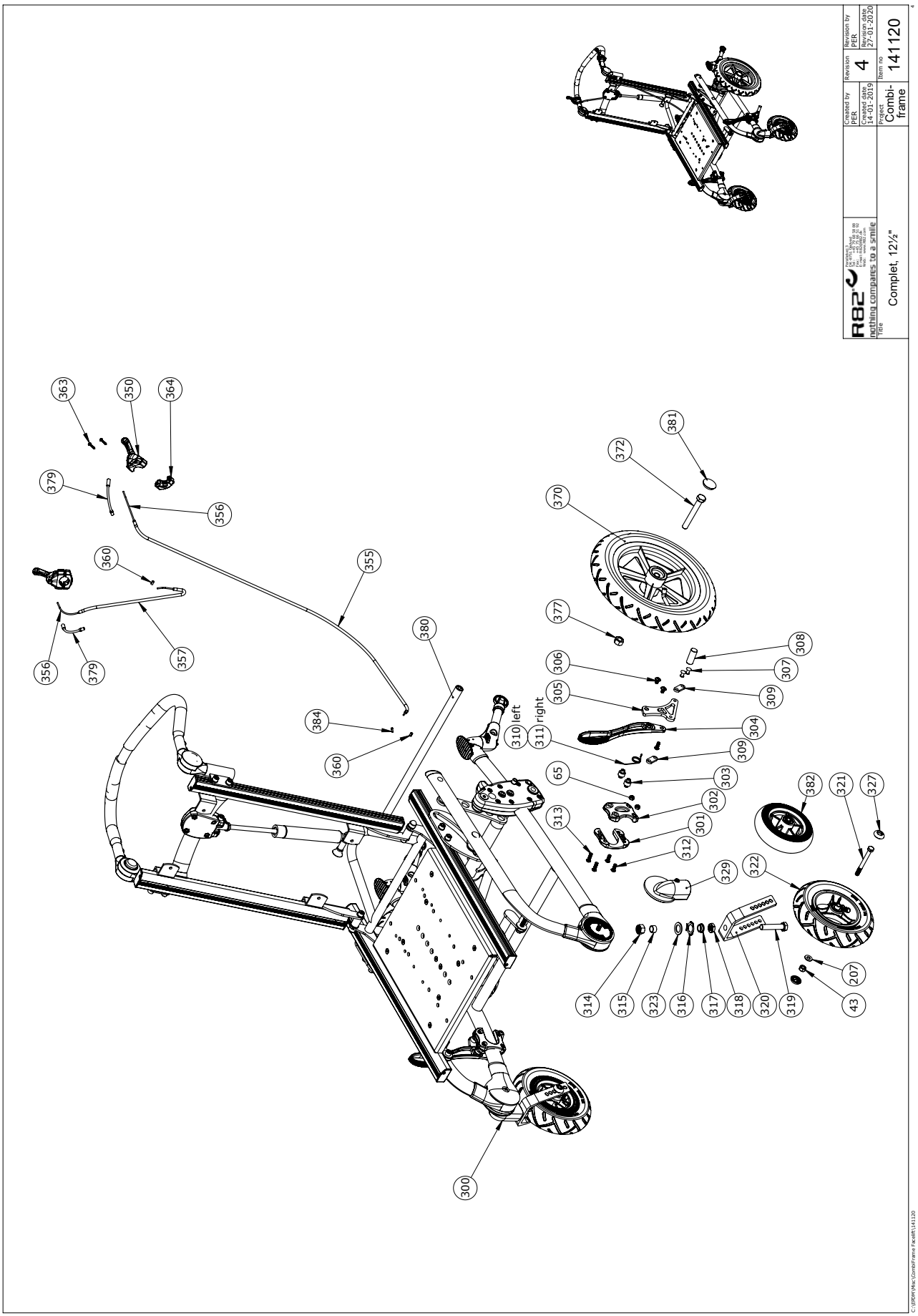

R82 A/S
Parallelvej 3
8751 Gedved
Denmark

Tel: +45 79 68 58 88
Fax: +45 75 66 51 92
E-mail: R82@R82.dk
Web: www.R82.org

Cvr. Nr.: 16 20 21 85
Swift: JYBA DKKK
Iban No.:DK8072450002003501

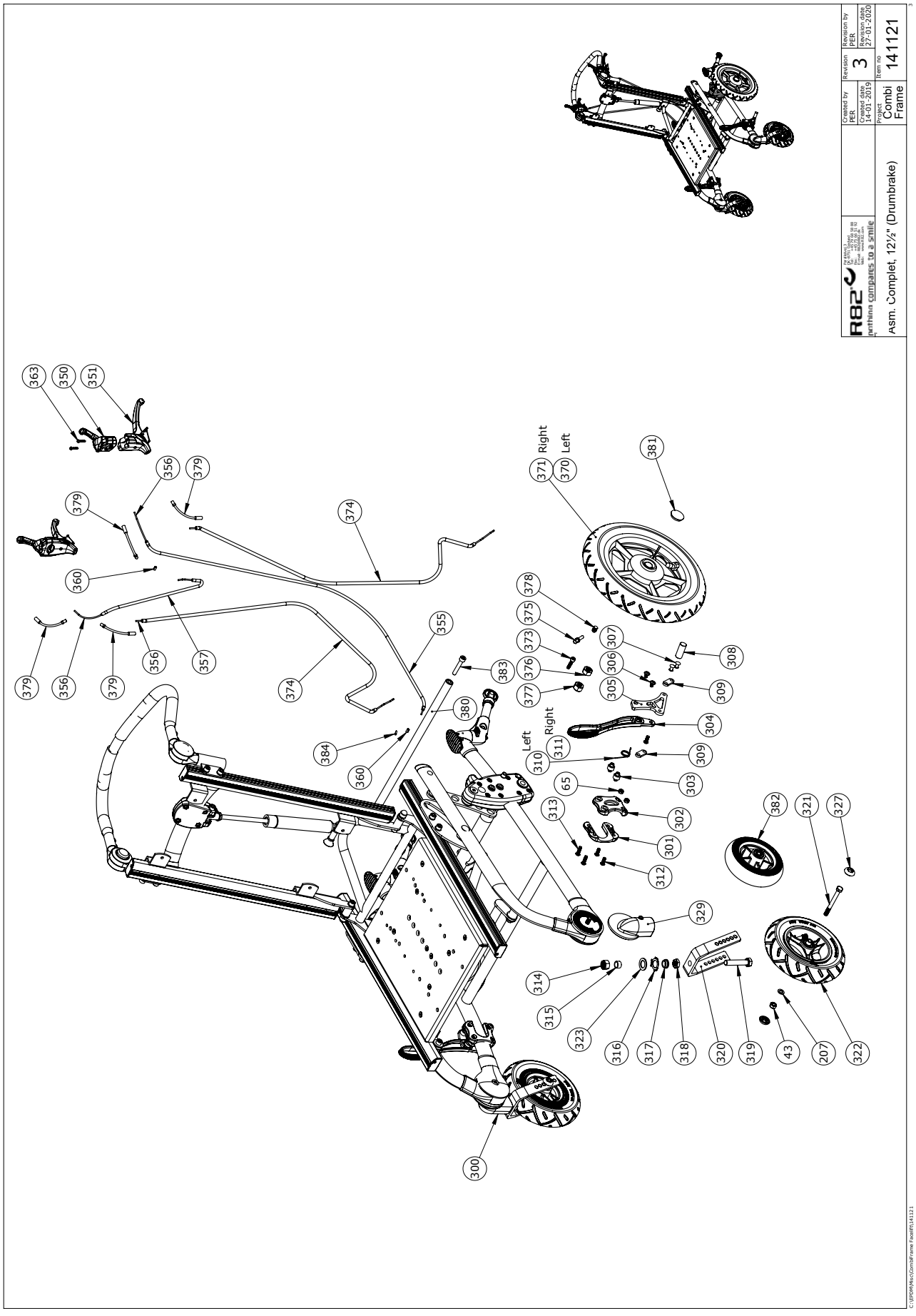

R82 A/S
Parallelvej 3
8751 Gedved
Denmark

Tel: +45 79 68 58 88
Fax: +45 75 66 51 92
E-mail: R82@R82.dk
Web: www.R82.org

Cvr. Nr.: 16 20 21 85
Swift: JYBA DKKK
Iban No.:DK8072450002003501

Position	Art nr.	Descirtion	Quantity	Unit of measure	Ean kode
43	1631080	Stainless lock nut 8mm	4	PCS	5707292141453
65	1631060	Stainless lock nut 6mm	2	PCS	5707292141446
207	1105080	Stainless washer 8mm	2	PCS	5707292140364
300	5097005-1	Holder front wheel right	1	PCS	5707292513847
301	74731	Cover inner, brake,	1	PCS	5707292412409
302	74730	Cover outer, brake, Cougar	1	PCS	5707292412416
303	6109200	M6 thread bush, braking system	2	PCS	5707292185952
304	74013	Braking arm	1	PCS	5707292378033
305	74644	Brake bracket	1	PCS	5707292407955
306	641100	B.h. W/flange M6*10	2	PCS	5707292139245
307	503175	Black case, Ø6,35*17,5mm	2	PCS	5707292137258
308	74764	Braking stick	1	PCS	5707292435958
309	72338	Mounting 12x4x34,5	2	PCS	5707292107794
310	74138	Spring for brake, left	1	PCS	5707292377500
311	74139	Spring for brake, right	1	PCS	5707292377517
312	659500	Button head screw	3	PCS	5707292139450
313	659550	Button head M6*20, stainless	2	PCS	5707292139467
314	1631120	Stainless lock nut 12mm	1	PCS	5707292502049
315	74804	Wheelbushing Cougar	1	PCS	5707292465177
316	683900	Tight-washer 12*18*1	1	PCS	5707292139726
317	1101600	Center spring washer 12mm	1	PCS	5707292140197
318	1760012	Kontranut M12,fzb	1	PCS	5707292519078
319	1902373	M12*60-hh-fzb	1	PCS	5707292519801
320	2965765	Front fork, 60 mm	1	PCS	5707292582218
321	1073661	Steel bolt M8*80 rf part.threa	2	PCS	5707292556585
322	3009501	190*50 solid racing	2	PCS	5707292483362
322	3009500	190*50 air racing	2	PCS	5707292483355
322	3007736	Wheel 140*40mm with rubber	2	PCS	5710000000000
323	310105	Pressurespring 1,5*16,2	1	PCS	5707292465191
324	683950	Tight-washer 16*22*0,5	2	PCS	5707292139733
325	1310542	Ferrule,black Ø8*Ø5mm	1	PCS	5707292472014
327	109378	Wheel protector	4	PCS	5707292581303
329	5097016-1	Holder front wheel left	1	PCS	5707292513854
332	3202010	20" wheel, no brake, air,black	2	PCS	5707290000000
332	3102415	24" wheel, no brake, mas,black	2	PCS	5707292584144
332	3202210	22" wheel no brake, air, black	2	PCS	5707292584090
332	3202410	24" wheel, no brake, air,black	2	PCS	5710000000000
332	3102015	20" wheel no brake flexel	2	PCS	5707292584052
332	3102215	22" wheel no brake flexel	2	PCS	5707292584106
332	3102415	24" wheel, no brake, mas,black	2	PCS	5710000000000
333	3202020	20" wheel w/db air	2	PCS	5710000000000
333	3202220	22" wheel, db, air, black	2	PCS	5710000000000
333	3202420	24" wheel, db, air, black	2	PCS	5710000000000
333	3102025	20" wheel w/db flexel	2	PCS	5707292584083
333	3102225	22" wheel W/db massive	2	PCS	5710000000000
333	3202010	20" wheel, no brake, air,black	2	PCS	5707292584045
333	3102425	24" wheel, with brake,black	2	PCS	5707292837622
333	3102025	20" wheel w/db flexel	2	PCS	5710000000000
343					

R82 A/S
Parallelvej 3
8751 Gedved
Denmark

Tel: +45 79 68 58 88
Fax: +45 75 66 51 92
E-mail: R82@R82.dk
Web: www.R82.org

Cvr. Nr.: 16 20 21 85
Swift: JYBA DKKK
Iban No.:DK8072450002003501

344					
346	0659500	Button head screw	2	PCS	5710000000000
347	380100	Clip for cable	2	PCS	5710000000000
351	3503535	Brake parking lever wo/clamp	2	PCS	5707292413536
353	5002750	Cable for brake, size 1+2	2	PCS	5710000000000
353	5002751	Cable for brake, size 3+4	2	PCS	5710000000000
353	5002747	Outer casing for break	2	PCS	5710000000000
355	5002751	Cable for brake, size 3+4	1	PCS	5707292413642
355	5002747	Outer casing for break	1	PCS	5707292415899
356	0371853	Strained wires 1,5mm 190 cm.	4	PCS	5707292135889
357	5002756	Cable for recline, outer 1-4	1	PCS	5707292413673
360	0388006	Screwnipple 5*7,5mm	2	PCS	5707292136114
361	3503536	Clamp w/screws	1	PCS	5710000000000
363	0603500	Insex screw 8*45	2	PCS	5710000000000
364	3503536	Clamp w/screws	1	PCS	5707292427762
370	3009517	12½*2 1/4"right,t/b air racing	1	PCS	5707292518071
370	3009516	12½*2 1/4" solid racing	2	PCS	5710000000000
370	3009519	12½*2 1/4"db,right,fast racing	1	PCS	5707292518095
370	3009515	12½*2 1/4" air racing	2	PCS	5710000000000
371	3009518	12½*2 1/4" left,t/b air racing	1	PCS	5707292518088
371	3009520	12½*2 1/4" db,left fast racing	1	PCS	5707292518101
372	1920100	Steel bolt M12*100, FZB	2	PCS	5710000000000
373	0609827	Stainless insex M6*20	2	PCS	5707292375049
374	5002750	Cable for brake, size 1+2	2	PCS	5707292413635
374	5002751	Cable for brake, size 3+4	2	PCS	5707292413642
374	5002747	Outer casing for break	2	PCS	5707290000000
375	0380000	Cable tighter M5*23	2	PCS	5707292135933
376	1604500	Steel nut 12mm, large pack	2	PCS	5707292141309
377	1608000	Lock nut 12mm, large pack	2	PCS	5707292141392
378	0380040	Cable bench screw M5	2	PCS	5707292135988
379	0380060	Flexible v-brake pipe.	4	PCS	5707292425195
380	104604-05	Cross tube welded, size 1	1	PCS	5707292569912
380	104605-05	Cross tube welded, size 2	1	PCS	5710000000000
380	104606-05	Cross tube welded, size 3	1	PCS	5710000000000
380	104607-05	Cross tube welded, size 4	1	PCS	5710000000000
381	2704300	Black hub cap for rolko wheel	2	PCS	5707292144515
382	3007736	Wheel 140*40mm with rubber	2	PCS	5710000000000
382	3009501	190*50 solid racing	2	PCS	5710000000000
383	0603500	Insex screw 8*45	2	PCS	5707292138231
384	0387000	End nipple for outer casing	1	PCS	5707292136091
390	111978	Lower arm for mud guard	2	PCS	5710000000000
391	107280	Bush for mudguard	2	PCS	5710000000000
392	0612700	Insex screw counters. 10*20	2	PCS	5710000000000
393	111979	Lower arm for mud guard DB	2	PCS	5710000000000
394	1105060	Stainless washer 6mm	2	PCS	5710000000000
330+331	2983063	Axle set 1x qr 012*98mm Cougar	2	PCS	5710000000000
334+344	2983061	Brake plate complet. A-side.	1	PCS	5710000000000
334+345	2983062	Brake plate complet. B-side	1	PCS	5710000000000
350+363	3503532	Gas pump lever without clamp	2	PCS	5707292427755
350+363	3503531	Gas pump lever with clamp	2	PCS	5710000000000

350+364	3503531	Gas pump lever with clamp	2	PCS	5710000000000
370+372	3009515	12½*2 1/4" air racing	2	PCS	5710000000000
370+372	3009516	12½*2 1/4" solid racing	2	PCS	5710000000000
MODULE	140901	Frontfork complete assembled Left	1	PCS	5707292546937
MODULE	141091	Frontfork complete assembled Right	1	PCS	5707292546944
MODULE	970939-L	Parking brake on frame, left	1	PCS	5707290000000
MODULE	970939-R	Parking brake (on frame),right	1	PCS	5707290000000
MODULE	970540-1	Pushbrace 0 complete CF:x 1+2	1	PCS	5707292841070
MODULE	970541-1	Push Brace CF:X 3, Cougar 1	1	PCS	5707292841063
MODULE	970542-1	Push Brace CF:X 4, Cougar 2	1	PCS	5707292841087

R82 A/S
Parallelvej 3
8751 Gedved
Denmark

Tel: +45 79 68 58 88
Fax: +45 75 66 51 92
E-mail: R82@R82.dk
Web: www.R82.org

Cvr. Nr.: 16 20 21 85
Swift: JYBA DKKK
Iban No.:DK8072450002003501

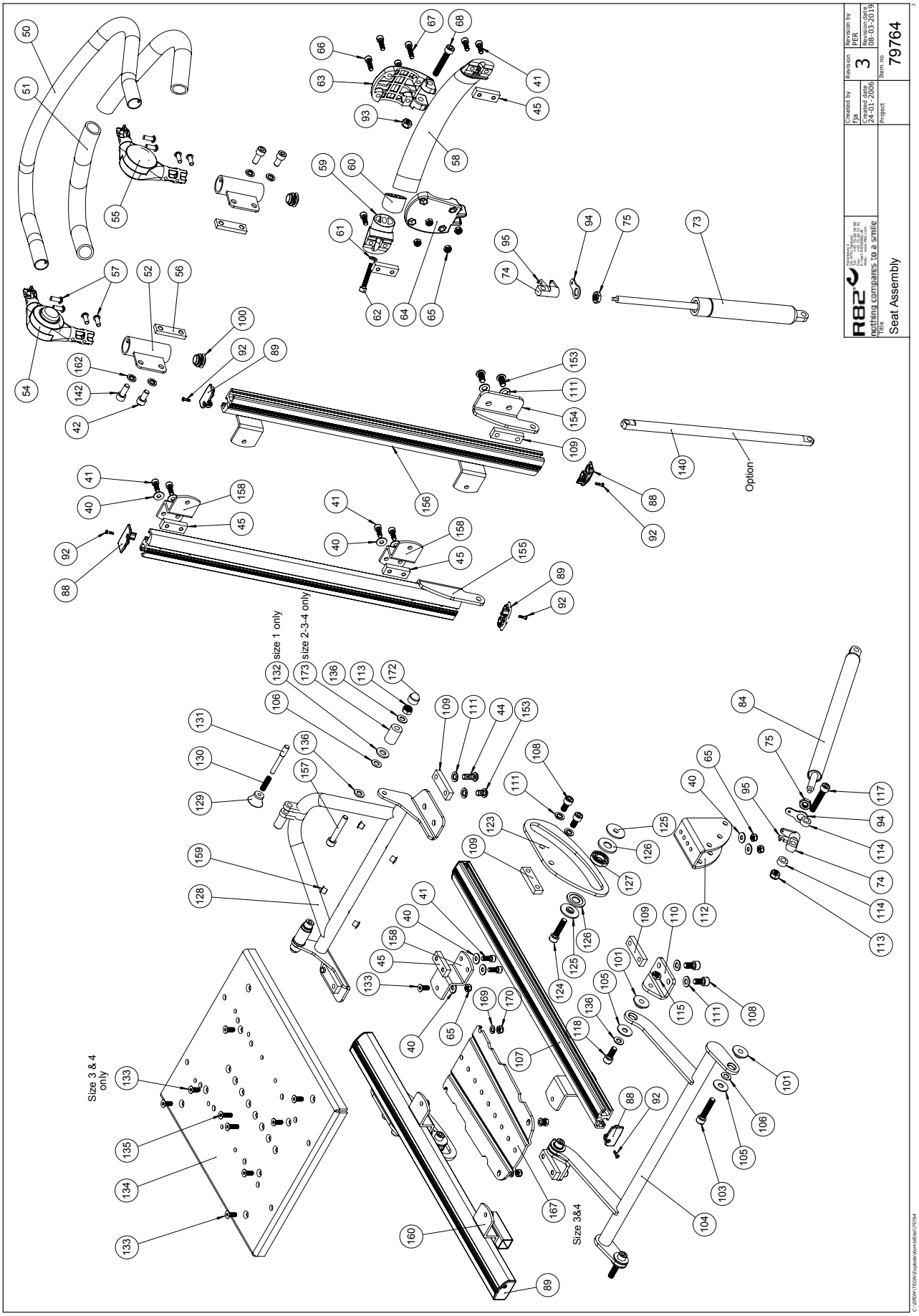

R82 A/S
Parallelvej 3
8751 Gedved
Denmark

Tel: +45 79 68 58 88
Fax: +45 75 66 51 92
E-mail: R82@R82.dk
Web: www.R82.org

Cvr. Nr.: 16 20 21 85
Swift: JYBA DKKK
Iban No.:DK8072450002003501

Position	Art nr.	Descirtion	Quantity	Unit of measure	Ean kode
40	1100490	Spring washer M6 stainless	14	PCS	5707292411297
41	0602205	Stainless insex M6*16	8	PCS	5707292404732
42	0602195	Insex M6*12 stainless	2	PCS	5707292404701
44	0662000	Button head screw 8*20 stainl.	2	PCS	5707292139573
45	80609	Slidebar 40*15*8,M6*2	4	PCS	5707292405418
50	127889	Handbrace new, size 0	1	PCS	5707292841278
50	127840	Handbrace new size 1	1	PCS	5707292840868
50	127837	Handbrace new, size 2	1	PCS	5707292841360
51	2500520	Tpe cover Ø20mm	2	PCS	5707292401649
52	127774	Mounting f.Push brace	2	PCS	5707292840851
54	140028	Angel joint right ø19x Ø 22.3	1	PCS	5707292874252
55	140129	Angel joint left ø19xø22.3	1	PCS	5707292874269
56	80614	Slidebar 70*15*8, M6*2	2	PCS	5707292449825
57	0663120	Button Head M6*16 stainless st	8	PCS	5707292581532
58	73757	Cross tube, size 0	1	Pieces	5707292430786
58	74679	Cross tube,back, size 1 260mm	1	Pieces	5707292415486
58	74605	Cross tube back, size 2 310 mm	1	Pieces	5707292403070
59	74531	Plug for cross tube, Cougar	2	Pieces	5707292410825
60	74662	Lock, moving part	2	Pieces	5707292401380
61	1105060	Stainless washer 6mm	2	Pieces	5707292140357
62	0602451	Insex M6*45, stainless	2	Pieces	5707292412461
63	74738	Holder front, back, Cougar	1	Pieces	5707292410832
64	74739	Cover bask for holder, Cougar	1	Pieces	5707292410849
65	1631060	Stainless lock nut 6mm	6	PCS	5707292141446
66	0609827	Stainless insex M6*20	2	Pieces	5707292375049
66	0659550	Button head M6*20, stainless	2	Pieces	5707292139467
67	0602425	Insex M6*25, stainless	12	Pieces	5707292404596
67	0659570	Button head screw 6*25 stainl.	2	Pieces	5707292139474
68	0663050	Button head M8*50, stainless	1	PCS	5707292400697
73	2205990	Bloc-o-lift 6853yz 350n	1	PCS	5707292447395
74	220007	Release head	1	PCS	5707292617316
75	1761000	Counter nut 10*1,0 fine thread	1	PCS	5707292141538
84	2200410	Hydro bloc	1	PCS	5707292466792
88	74765	Plug for side part, left	2	PCS	5707292410931
89	74766	Plug for side part, right	2	PCS	5707292410948
92	1810050	Plate screw 7981c st 2,9*13	4	PCS	5707292404671
93	1607001	Self-locking nut 8mm	1	Pieces	5707292401281
94	82268	Wire mounting by pedal	1	PCS	5707292123039
95	2200050	Small release arm	1	PCS	5707292143075
96	380000	Cable tighter M5*23	1	PCS	5707292135933
100	2503010	Ferrule d22*1,8-3,5, black	2	PCS	5707292357632
101	73733	Bush	2	PCS	5707292431011
103	0609825	Stainless insex screw 8*25	2	PCS	5707292138583
104	73771-05	Tip arm size 1	1	PCS	5707292567635
104	73771-54	Tilt arm size 1, silver	1	PCS	5707292432384
104	73772-10	Tip arm size 2	1	PCS	5707292567666
104	73772-54	Tilt arm size 2, silver	1	PCS	5707292432377
104	73772-05	Tip arm size 2	1	PCS	5707292567659
104	73773-05	Tip arm size 3	1	PCS	5710000000000

R82 A/S
Parallelvej 3
8751 Gedved
Denmark

Tel: +45 79 68 58 88
Fax: +45 75 66 51 92
E-mail: R82@R82.dk
Web: www.R82.org

Cvr. Nr.: 16 20 21 85
Swift: JYBA DKKK
Iban No.:DK8072450002003501

104	73773-54	Tilt arm size 3, silver	1	PCS	5710000000000
104	73774-05	Tip arm size 4	1	PCS	5710000000000
104	73774-54	Tilt arm size 4, silver	1	PCS	5710000000000
105	1108025	Washer M8,stainless a4,din9021	2	PCS	5707292140395
106	1310645	Washer, nature Ø16*8*0,5mm	2	PCS	5707292446015
107	73855	Seatprofile size 1 Combi	2	PCS	5707292498908
107	73856	Seatprofile size 2 Combi	2	PCS	5707292498915
107	73857	Seatprofile size 3 Combi	2	PCS	5710000000000
107	73858	Seat profile size 4 combiframe	2	PCS	5710000000000
108	0609816	Stainless insex screw 8*16	8	PCS	5707292138569
109	80616	Slidebar 50x15x6,M8,2	6	PCS	5707292476319
110	73745	Bracket for Seat	2	PCS	5707292430847
111	1101000	Center spring washer 8mm	12	PCS	5707292140173
112	73732	Bracket f. Seat	1	PCS	5707292430946
113	1631080	Stainless lock nut 8mm	3	PCS	5707292141453
114	1350021	Distance piece 11*15*8,2mm	2	PCS	5707292140890
115	1750800	Lock nut, stainless M8	2	PCS	5707292141484
117	0602488	Insex M8*50,stainless	1	PCS	5707292410962
118	609820	Stainless insex screw 8*20	2	PCS	5707292138576
123	73852	sliding brackets	2	PCS	5707292474148
124	0609835	Stainless insex screw 8*35	2	PCS	5707292138606
125	73751	Disk for Seat	4	PCS	5707292430823
126	73752	Disk for seat, pom	4	PCS	5707292430816
127	2985211	Ball bearing 608-2rsh	2	PCS	5707292432124
128	73847	Seat tip size 1	1	PCS	5707292474162
128	73848	Seat tip size 2	1	PCS	5707292474179
128	73849	Seat tip size 3	1	PCS	5710000000000
128	73850	Seat tip size 4	1	PCS	5710000000000
129	3706256	Knob 25, M6 thread	1	PCS	5707292147219
130	310101	Pressure spring stainles	1	PCS	5707292471994
131	6109348	Pin for gas spring back	1	PCS	5707292186072
132	1310645	Washer, nature Ø16*8*0,5mm	2	PCS	5710000000000
133	609728	Insex, stainless 6*16 uh	4	PCS	5707292138491
134	73761	Seatplate size 1	1	PCS	5707292430762
134	73762	Seatplate size 2	1	PCS	5707292430755
134	73763	Seatplate size 3	1	PCS	5710000000000
134	73764	Seatplate size 4	1	PCS	5710000000000
135	609728	Insex, stainless 6*16 uh	2	PCS	5707292138491
135	609730	Stainless insex 6*20 uh.	2	PCS	5710000000000
136	1105080	Stainless washer 8mm	2	PCS	5707292140364
140	74686	Alu rod, recline add-on,sz 1-2	1	PCS	5707292437082
140	74664-1	Alu rod, fixed back sz 3-4	1	PCS	5710000000000
142	602207	Insex M6*18, stainless	2	PCS	5707292430380
153	661500	Button head screw 8*16 stainl.	2	PCS	5707292139559
154	73825	bracket, left.	1	PCS	5707292474131
155	73824	bracket, right	1	PCS	5707292474124
156	73791	Back profile size 1 Combiframe	2	PCS	5707292430533
156	73792	Back profile size 2 Combiframe	2	PCS	5707292430540
156	73793	Back profile size 3 Combiframe	2	PCS	5707292430557
156	73794	Back profile size 4 combiframe	2	PCS	5707292430564

R82 A/S
Parallelvej 3
8751 Gedved
Denmark

Tel: +45 79 68 58 88
Fax: +45 75 66 51 92
E-mail: R82@R82.dk
Web: www.R82.org

Cvr. Nr.: 16 20 21 85
Swift: JYBA DKKK
Iban No.:DK8072450002003501

158	73724-01	Bracket for seatplate	2	PCS	5707292431004
159	1310529	Covering stud, black 6,5mm	4	PCS	5707292445445
160	107356	Mounting f. knee support	2	PCS	5707292572271
162	1100500	Spring washer 8mm, stainless	4	PCS	5707292140142
167	73786	Plate for size 3+4	1	PCS	5710000000000
169	1100490	Spring washer M6 stainless	4	PCS	5710000000000
170	1631060	Stainless lock nut 6mm	4	PCS	5710000000000
172	2501406	Nut protection, black, f/M8	2	PCS	5707292375919
173	107374	Bush for back	2	PCS	5710000000000

R82 A/S
Parallelvej 3
8751 Gedved
Denmark

Tel: +45 79 68 58 88
Fax: +45 75 66 51 92
E-mail: R82@R82.dk
Web: www.R82.org

Cvr. Nr.: 16 20 21 85
Swift: JYBA DKKK
Iban No.:DK8072450002003501

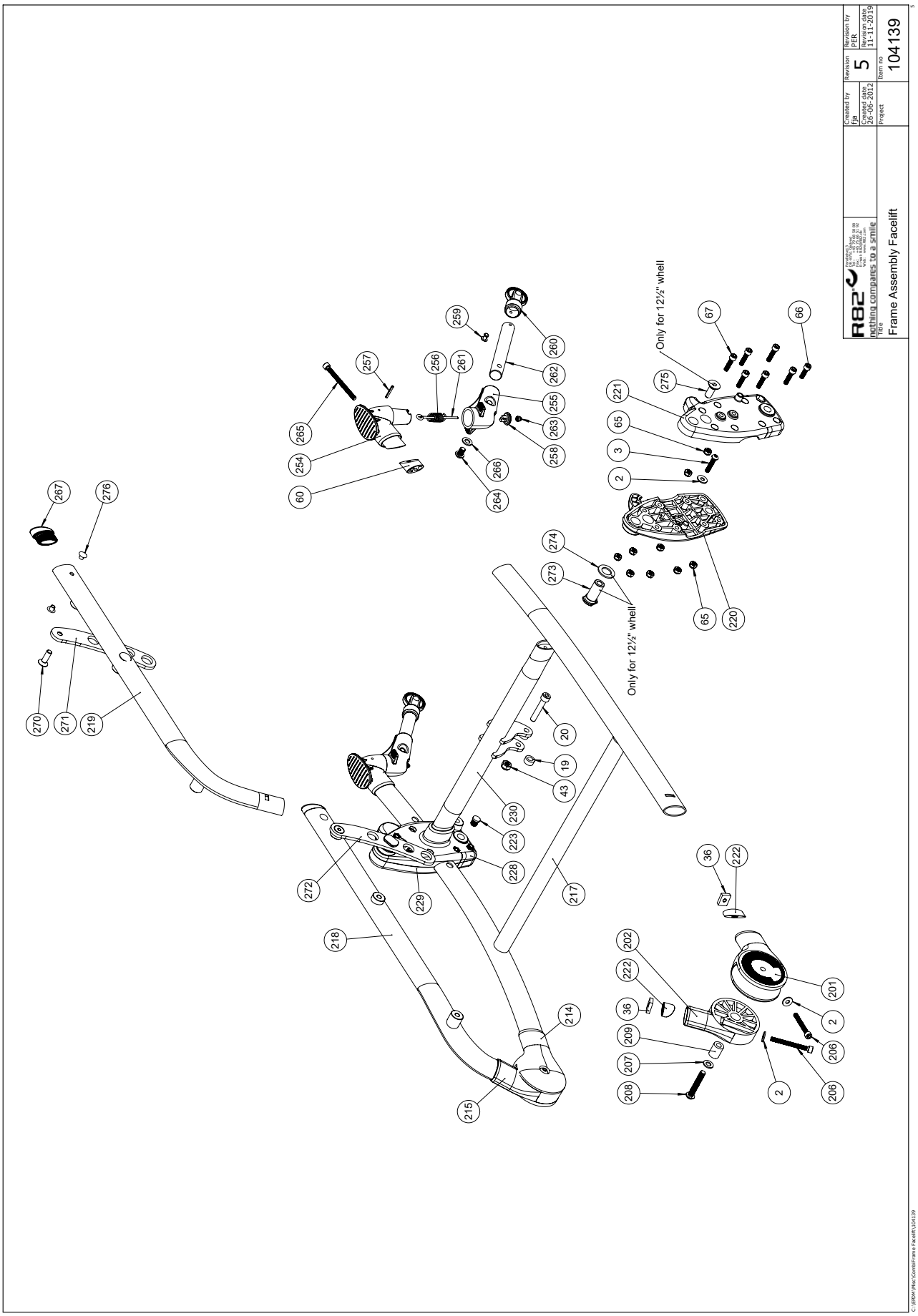

R82 A/S
Parallelvej 3
8751 Gedved
Denmark

Tel: +45 79 68 58 88
Fax: +45 75 66 51 92
E-mail: R82@R82.dk
Web: www.R82.org

Cvr. Nr.: 16 20 21 85
Swift: JYBA DKKK
Iban No.:DK8072450002003501

Position	Art nr.	Descirtion	Quantity	Unit of measure	Ean kode
2	1106025	Washer M6 o16/o6,4x1,6	6	PCS	5707292404664
3	0659580	Button head screw 6*30 mm	2	PCS	5707292139481
19	1350015	Dist.piece,black 7*Ø15*Ø8,2mm	2	PCS	5707292467225
20	0603500	Insex M8*45	1	PCS	5707292138231
36	74090	Mounting for frontfork	4	PCS	5707292374066
43	1631080	Stainless lock nut 8mm	1	PCS	5707292141453
65	1631060	Stainless lock nut 6mm	18	PCS	5707292141446
66	0609827	Stainless insex M6*20	2	PCS	5707292375049
67	0602425	Insex M6*25, stainless	12	PCS	5707292404596
201	74703	For wheel lower, left	1	PCS	5707292411631
202	74705	Holder front wheel upper,left	1	PCS	5707292411648
206	0602460	Insex M6*60, stainless	4	PCS	5707292400727
207	1105080	Stainless washer 8mm	2	PCS	5707292140364
208	0663045	Button head M8*45, stainless	2	PCS	5707292139634
209	74654	Bush Ø16/Ø8, 1*21, Cougar	2	PCS	5707292411662
214	74702	Front wheel lower, right	1	PCS	5707292411686
215	74704	Holder front wheel upper,right	1	PCS	5707292411693
217	74690-05	Lower frame welded, size 1	1	PCS	5707292567888
217	74690-54	Lower frame welded, size 1	1	PCS	5707292413031
217	74691-05	Lower frame welded, size 2	1	PCS	5707292567154
217	74691-10	Lower frame welded, size 2	1	PCS	5707292567994
217	74691-54	Lower frame welded, size 2	1	PCS	5707292413000
217	74692-05	Lower frame, welded, size 3	1	PCS	5707292567147
217	74692-54	Lower frame welded, size 3	1	PCS	5707290000000
217	74693-05	Lower frame welded, size 4	1	PCS	5710000000000
217	74693-54	Lower frame, welded, size 4	1	PCS	5710000000000
218	104150-05	Upper frame welded, right	1	PCS	5707292567826
218	104150-54	Upper frame welded, right	1	PCS	5707292567765
218	104150-10	Upper frame welded, right	1	PCS	5707292567833
219	104151-05	Upper frame welded, left	1	PCS	5707292567840
219	104151-54	Upper frame welded, left	1	PCS	5707292567864
219	104151-10	Upper frame welded, left	1	PCS	5707292567857
220	74708-1	Wheel suspension inner left	1	PCS	5707292509543
221	74710-1	Wheel suspension outer left	1	PCS	5707292509567
222	74683	Lock, moving part, short	4	PCS	5707292425904
223	2501600	Ferrule d15*1,0 black	2	PCS	5707292143969
228	74709-1	Wheel suspension inner right	1	PCS	5707292509550
229	74711-1	Wheel suspension outer right	1	PCS	5707292509574
230	73726-05	Cross tube size 1 flattened	1	PCS	5707292567918
230	73726-54	Cross pipe size 1, silver	1	PCS	5707292431356
230	73727-05	Cross pipe size 2, black	1	PCS	5707292568007
230	73727-10	Cross pipe size 2, white	1	PCS	5707292568014
230	73727-54	Cross pipe size 2, silver	1	PCS	5707292431387
230	73728-05	Cross tube size 3, black	1	PCS	5707292568199
230	73728-54	Cross pipe size 3, silver	1	PCS	5707290000000
230	73729-05	Cross pipe size 4, black	1	PCS	5710000000000
230	73729-54	Cross pipe size 4, silver	1	PCS	5710000000000
257	5002756	Cable for recline, outer 1-4	1	PCS	5707290000000
264	0662000	Button head screw 8*20 stainl.	2	PCS	5707292139573

R82 A/S
Parallelvej 3
8751 Gedved
Denmark

Tel: +45 79 68 58 88
Fax: +45 75 66 51 92
E-mail: R82@R82.dk
Web: www.R82.org

Cvr. Nr.: 16 20 21 85
Swift: JYBA DKKK
Iban No.:DK8072450002003501

266	1101050	Spring washer M8, wavy FZB	2	PCS	5707292458667
267	74767	Plug for ellipse 20 * 40	2	PCS	5707292412669
270	0624825	Insex screw counters. 8*25	2	PCS	5707292139078
271	104212	Height adjustment bracket left	1	PCS	5707292567819
272	104211	Height adjustment bracket Righ	1	PCS	5707292567802
273	75696	Bush for wheel support	2	PCS	5707292503862
274	1102750	Washer 16mm	2	PCS	5707292140258
275	0612700	Insex screw counters. 10*20	2	PCS	5707292138767
276	1310529	Covering stud, black 6,5mm	4	PCS	5707292445445
60+ 254–258 261+263 265	5097060	Upperpart antitip device	2	PCS	5707292448668
259+260 262	5097058	Extentionbar with wheel, long	2	PCS	5707292570352

R82 A/S
Parallelvej 3
8751 Gedved
Denmark

Tel: +45 79 68 58 88
Fax: +45 75 66 51 92
E-mail: R82@R82.dk
Web: www.R82.org

Cvr. Nr.: 16 20 21 85
Swift: JYBA DKKK
Iban No.:DK8072450002003501

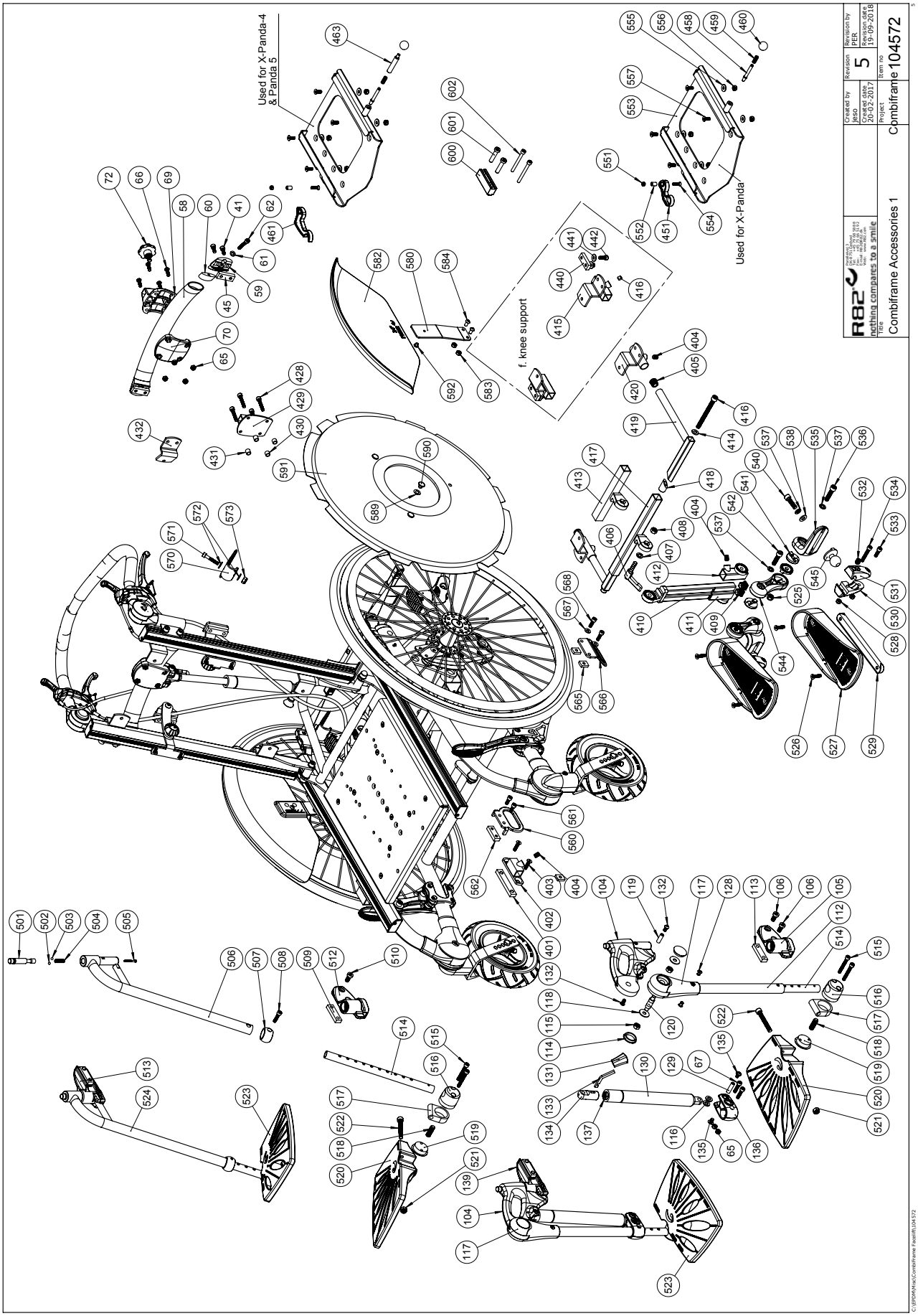

R82 A/S
Parallelvej 3
8751 Gedved
Denmark

Tel: +45 79 68 58 88
Fax: +45 75 66 51 92
E-mail: R82@R82.dk
Web: www.R82.org

Cvr. Nr.: 16 20 21 85
Swift: JYBA DKKK
Iban No.:DK8072450002003501

Position	Art nr.	Descirtion	Quantity	Unit of measure	Ean kode
41	0602205	Stainless insex M6*16	4	PCS	5707292404732
45	80609	Slidebar 40*15*8,M6*2	2	PCS	5707292405418
58	74605	Cross tube back, size 2 310 mm	1	PCS	5707292403070
58	74679	Cross tube,back, size 1 260mm	1	PCS	5707292415486
58	73757	Cross tube, size 0	1	PCS	5707292430786
59	74531	Plug for cross tube, Cougar	2	PCS	5707292410825
60	74662	Lock, moving part	2	PCS	5707292401380
61	1105060	Stainless washer 6mm	2	PCS	5707292140357
62	0602451	Insex M6*45, stainless	2	PCS	5707292412461
65	1631060	Stainless lock nut 6mm	4	PCS	5707292141446
66	0659550	Button head M6*20, stainless	4	PCS	5707292139467
67	0602425	Insex M6*25, stainless	4	PCS	5707292404596
68	0663050	Button head M8*50, stainless	1	PCS	5707292400697
69	74745	Holder for headrest	1	PCS	5707292410856
70	74746	Cover for holder, headrest	1	PCS	5707292410863
72	3503001	R82 handle M8x15mm screw	1	PCS	5707292413925
73	2205990	Bloc-o-lift 6853yz 350n	1	PCS	5707292447395
74	220007	Release head	1	PCS	5707292617316
75	1761000	Counter nut 10*1,0 fine thread	1	PCS	5707292141538
93	1607002	Lock nut 8mm, A2	1	PCS	5707292410955
94	82268	Wire mounting by pedal	1	PCS	5707292123039
95	2200050	Small release arm	1	PCS	5707292143075
96	0380000	Cable tighter M5*23	1	PCS	5707292135933
106	0603530	Insex low head M8x16 stainless	4	PCS	5707292412492
112	74852	Tube upper part	2	PCS	5707292418586
113	80616	Slidebar 50x15x6,M8,2	2	PCS	5707292476319
114	2985000	Pressureplug black soft rubber	4	PCS	5707292145314
115	1607002	Lock nut 8mm, A2	4	PCS	5707292410955
116	1350005	Pvc bush black 15*8,2*4mm	4	PCS	5707292425133
117	74749	Rotary bushing	2	PCS	5707292415974
118	1108025	Washer M8,stainless a4,din9021	4	PCS	5707292140395
119	72702	Shaft	2	PCS	5707292407924
120	74653	Bush Ø12-M8, footrest	2	PCS	5707292418555
128	0506513	Stainless blind rivet Ø4, 8*12	4	PCS	5707292137326
129	74675	Bush Ø8x28-M6, Cougar	2	PCS	5707292412065
132	0659200	Button head screw 6*12 stainl.	4	PCS	5707292139436
135	0659010	Button head with flange M6*10	4	PCS	5707292356819
136	74759	Extension coupling, footrest	2	PCS	5707292412140
140	74686	Alu rod, recline add-on,sz 1-2	1	PCS	5707292437082
140	74664-1	Alu rod, fixed back sz 3-4	1	PCS	5707292464552
356	0371853	Strained wires 1,5mm 190 cm.	1	PCS	5707292135889
357	5002756	Cable for recline, outer 1-4	1	PCS	5707292413673
360	0388006	Screwnipple 5*7,5mm	1	PCS	5707292136114
364	3503536	Clamp w/screws	1	PCS	5707292427762
379	0380060	Flexible v-brake pipe.	1	PCS	5707292425195
390	111978	Lower arm for mud guard	2	PCS	5,70729E+12
391	107280	Bush for mudguard	2	PCS	5,70729E+12
392	612700	Insex screw counters. 10*20	2	PCS	5,70729E+12
393	111979	Lower arm for mud guard DB	2	PCS	5,70729E+12

394	1105060	Stainless washer 6mm	2	PCS	5,70729E+12
401	80618	Slidebar 80*15*8,M8*2	2	PCS	5707292434258
402	73741	Footrest mounting	2	PCS	5707292433480
403	0603533	Insex M8*16	4	PCS	5707292575296
404	0808012	Stainless stop screw 8*12	2	PCS	5707292140067
415	107356	Mounting f. knee support	2	PCS	5707292572271
416	0808012	Stainless stop screw 8*12	2	PCS	5707292140067
428	0659585	Button head M6*35, stainless	4	PCS	5707292139498
429	74880	Mounting for headsupport	1	PCS	5707292432230
430	81693	Distance part, seat/adaptor	2	PCS	5707292117847
431	81219	Bush for headrestmounting	2	PCS	5707292434265
440	80609	Slidebar 40*15*8,M6*2	2	PCS	5707292405418
441	1100490	Spring washer M6 stainless	4	PCS	5707292411297
442	0602205	Stainless insex M6*16	4	PCS	5707292404732
451	82880	Handle for adaptor	1	PCS	5707292361318
458	6113000	Spindle, t-part/frame	1	PCS	5707292186362
459	0310100	Pressure spring 0,9*8*23*10,5v	1	PCS	5707292135513
460	3502008	Knob handle Ø20 M6	1	PCS	5707292146830
461	75905	Clamping grip	1	PCS	5707292534590
463	6118750	Handle x:panda	1	PCS	5707292530509
501	74816	Press button for foot rest	1,00	Pieces	5707292425843
502	0250020	Steel ball rb5	2,00	Pieces	5707292415196
504	0310100	Pressurespring 0,9*8*23*10,5v	1,00	Pieces	5707292135513
505	0602457	Insex M3*30, stainless	1,00	Pieces	5707292412478
506	74877	Upper part for foot rest,left	1,00	Pieces	5707292425881
507	74814	Bush for footrest	2	PCS	5707292426239
508	0602425	Insex M6*25, stainless	2	PCS	5707292404596
509	80616	Slidebar 50x15x6,M8,2	2	PCS	5707292476319
510	0603530	Insex low head M8x16 stainless	4	PCS	5707292412492
513	74812	Stationary bracket, right	1,00	Pieces	5707292415813
524	5097037	Upper part for foot rest,right	1,00	Pieces	5707292432667
551	1606300	Lock nut 5 mm	1	PCS	5707292141354
552	75641	Bush 5-8*11,8	1	PCS	5707292466501
553	75609-01	T-frame,x:panda på combi frame	1	PCS	5707292466440
554	0615020	Insex screw counters. 5*20	1	PCS	5707292138866
555	1105060	Stainless washer 6mm	4	PCS	5707292140357
556	1631060	Stainless lock nut 6mm	4	PCS	5707292141446
557	0609728	Insex, stainless 6*16 uh	4	PCS	5707292138491
580	111977	Upper Arm for mud guard	2	PCS	5707292588876
582	77895	20" Fender	2	PCS	5707292571687
582	77921	Fender 22"	2	PCS	5707292571694
582	77986	Fender 24"	2	PCS	5707292571700
583	1631060	Stainless lock nut 6mm	4	PCS	5707292141446
584	0659005	Insex button head M6*10,stainl	4	PCS	5707292423740
589+590 591	971020	Spoke protector for 20” wheel	2	PCS	5707292574367
589+590 591	971022	Spoke protector for 22” wheel	2	PCS	5707292574374
589+590 591	971024	Spoke protector for 24” wheel	2	PCS	5707292574381
592	0631961	Button head screw 6*6 black	2	PCS	5707292577764

600	111988	Spacer Block	2	PCS	5707292593337
601	0602460	Insex M6*60, stainless	4	PCS	5707292400727
602	0603537	Insex low head M8x35	4	PCS	5707292575333
350+363	3503532	Gas pump lever without clamp	1	PCS	5707292427755
350+363	3503531	Gas pump lever with clamp	1	PCS	5707292413529
104+139	5097046	Footsupport bracket Cougar	1	PCS	5707292552853
104+105	5097047	Footsupport bracket Cougar	1	PCS	5707292552860
514–522	5097021	Baseplate mounted,left size 1	1	PCS	5707292423443
514–519 521+523	5097022	Baseplate mounted,right size 1	1	PCS	5707292423450
130+131 133+134 137	5097011	Block-o-lift footrest, mounted	2	PCS	5707292416391
514–522	5097039	Baseplate mounted,left size 2	1	PCS	5707292433855
514–519 521+523	5097040	Baseplate mounted,right size 2	1	PCS	5707292433862
514–522	5097041	Baseplate mounted,left size 3	1	PCS	5707292433886
514–519 521+523	5097042	Baseplate mounted,right size 3	1	PCS	5707292433893

R82 A/S
Parallelvej 3
8751 Gedved
Denmark

Tel: +45 79 68 58 88
Fax: +45 75 66 51 92
E-mail: R82@R82.dk
Web: www.R82.org

Cvr. Nr.: 16 20 21 85
Swift: JYBA DKKK
Iban No.:DK8072450002003501